Remarks

material :
* front : diecast zamak
* chassis : steel 1mm
* cover : steel 1.25mm
finishing : wetpainting RAL9011 light structured

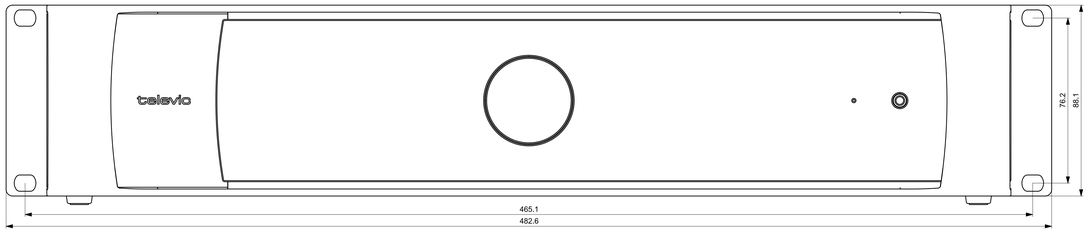


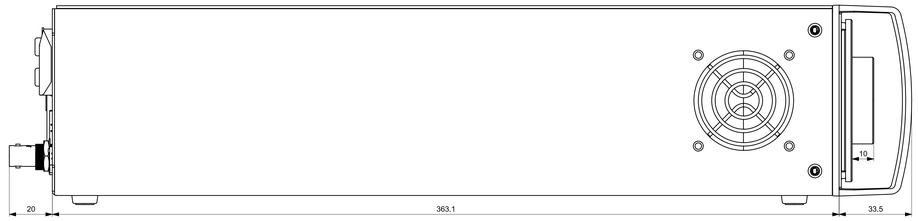


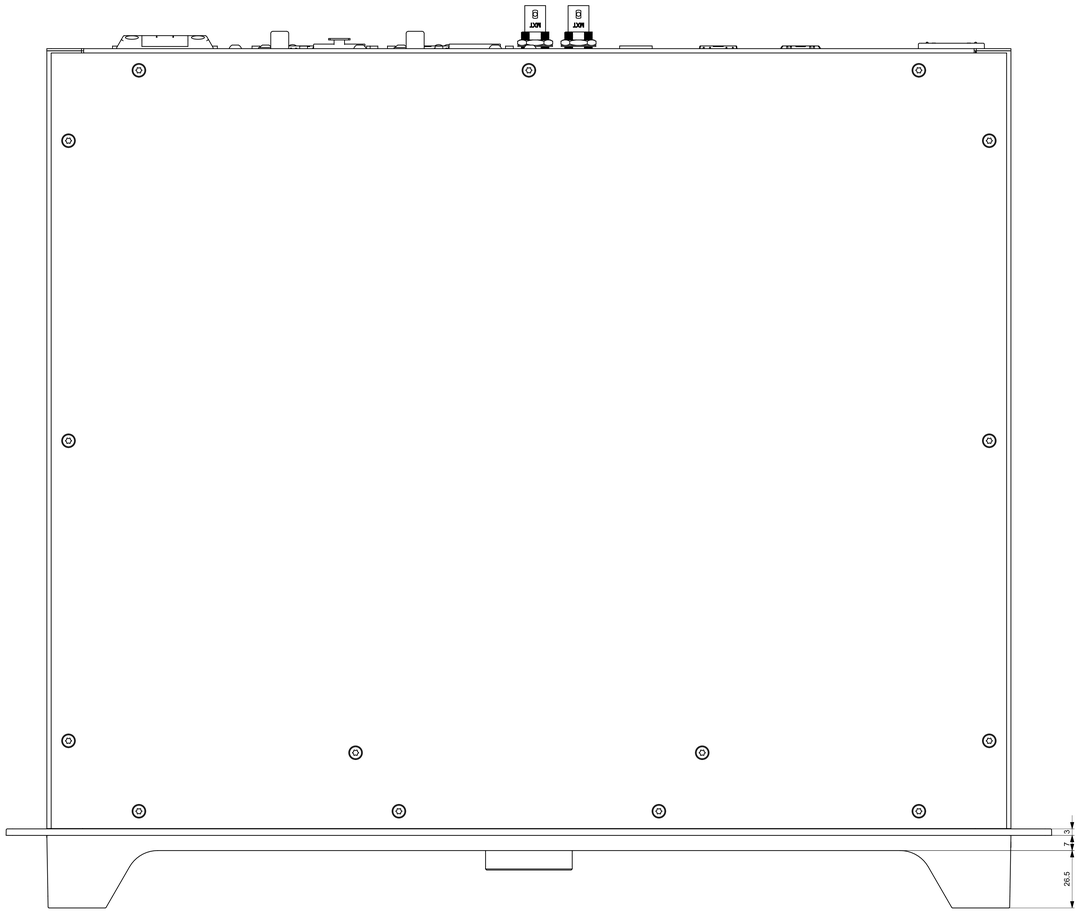


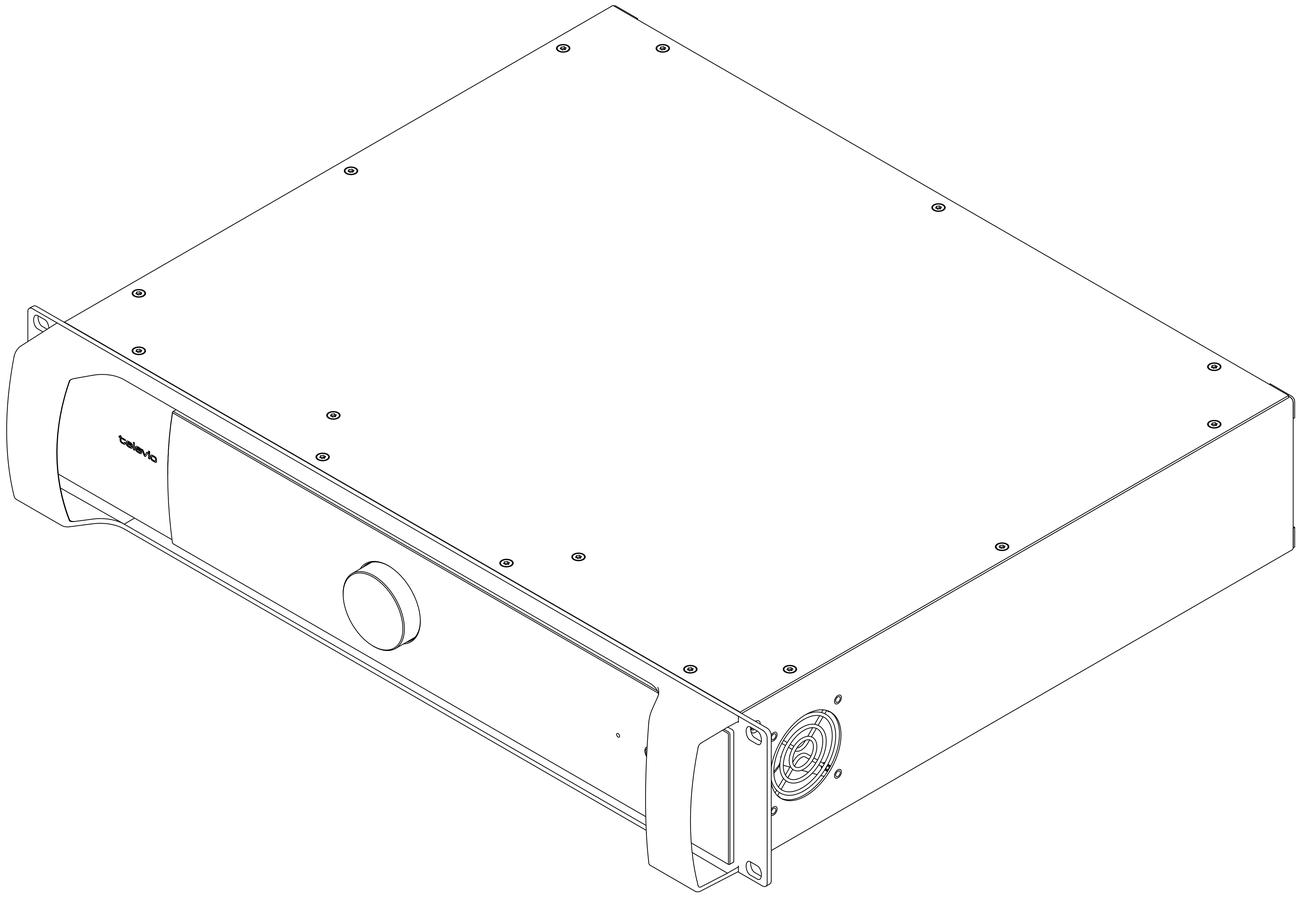


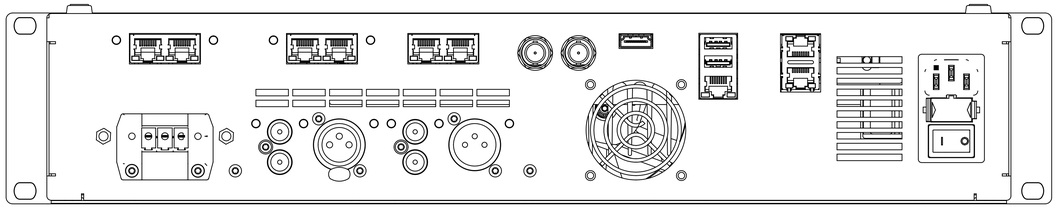

| | | | | | |
|---|---|---|---|---|---|
| 0.01 | | original drawing | | 07/01/2015 | SDL |
| Revision | ECN-nr | Remarks - description | | Date | Name |
| Linear tolerances: ISO 2768-middle | Surface roughness: ISO 1302 | Shape and positioning tolerances: ISO 1101 / ISO 2768 - K | Bend tolerances: ISO 2768-middle | Finishing: see remarks | |
| Drawing name: PLIXUS MME | | | | Material: see remarks | |
| Drawn by: SDL 07/01/2015 | Approved by: APPROVE DATE_APPROV | Drawing number: 71.98.2900_M07_2D_0.01 | unit : mm | Sheet: 1 of 1 | Scale: 1 : 1 |
| | | | | Format: A0 | |

televic conference

All rights reserved. No parts of this concept may be reproduced in any form or by any means without the prior written permission of Televic.