Remarks

material front : steel 3mm
material chassis : steel 1mm
material cover: steel 1.25mm

finishing front : powder coated RAL9011 light structured
finishing chassis and cover : nickelplating

screening front : RAL7035
screening chassis : RAL9011

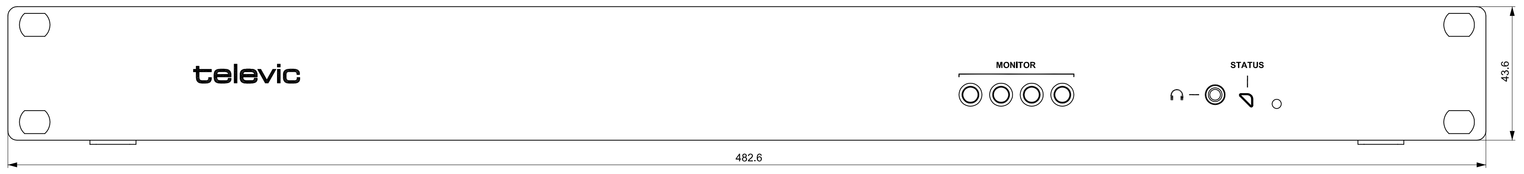

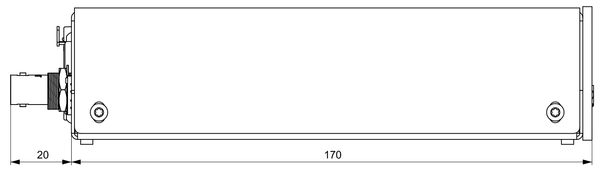

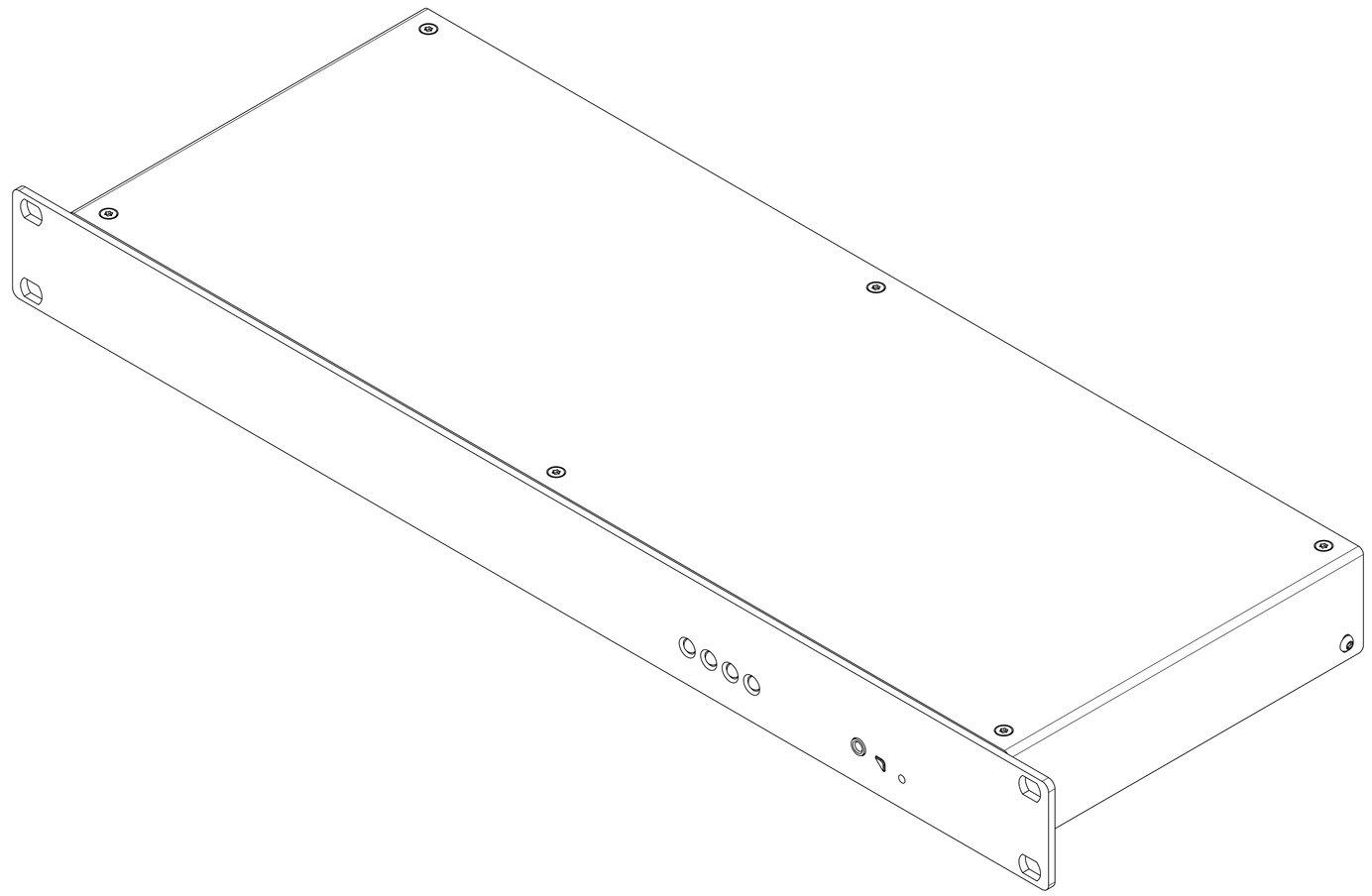

BACK VIEW :

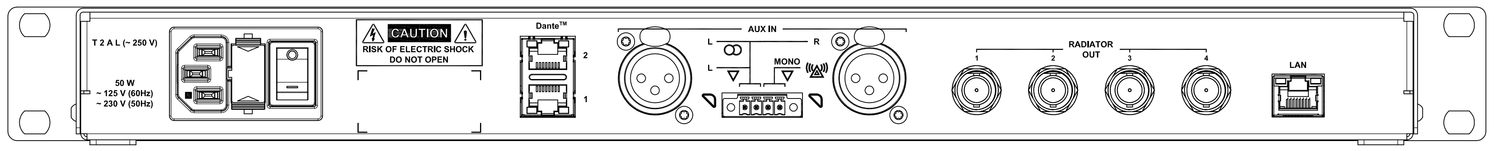

Revision	ECNnr	Remarks + description	Date	Name

Linear tolerances	Surface roughness	Shape and positioning tolerances	Bend tolerances	Finishing
ISO 2768-middle	ISO 1302	ISO 1101 / ISO 2768 - K	ISO 2768-middle	see remarks

Drawing name: LINGUA TX

Material: Steel

	Name	Date
Drawn by	SDL	29/02/2016
Approved by	APPROVE D BY	DATE APPROV ED

unit : mm

Drawing number: 71.98.0215_M07_2D_0.01

Sheet: 1 of 1
Scale: 1 : 1
Format: A0

televic conference

All rights reserved. No parts of this concept may be reproduced in any form or by any means without the prior written permission of Televic.